2SK2617LS

N- Channel MOS Silicon FET
Very High-Speed Switching Applications

TENTATIVE

Features and Applications

- Low ON-state resistance.
- Low Qg

Absolute Maximum Ratings / Ta=25°C

				unit
Drain to Source Voltage	VDSS		500	V
Gate to Source Voltage	VGSS		±30	V
Drain Current (DC)	ID		4	A
Drain Current (Pulse)	IDP		16	A
Allowable power Dissipation	PD	(TC=25°C)	25	W
Channel Temperature	Tch		150	°C
Storage Temperature	Tstg		−55 to +150	°C

Electrical Characteristics / Ta=25°C

			min	typ	max	unit
Drain to Source Breakdown Voltage	V(BR)DSS	ID=1mA , VGS=0	500			V
Zero Gate Voltage Drain Current	IDSS	VDS=500V , VGS=0			1.0	mA
Gate to Source Leakage Current	IGSS	VGS=±30V , VDS=0			±100	mA
Cutoff Voltage	VGS(Off)	VDS=10V , ID=1mA	3.5		5.5	V
Forward Transfer Admittance	| yfs |	VDS=10V , ID=2A	1.1	2.2		S
Static Drain to Source on State Resistance	RDS(On)	ID=2A , VGS=15V		1.2	1.6	Ω
Input Capacitance	Ciss	VDS=20V , f=1MHz		550		pF
Output Capacitance	Coss	VDS=20V , f=1MHz		190		pF
Reverse Transfer Capacitance	Crss	VDS=20V , f=1MHz		95		pF
Total Gate Charge	Qg	VDS=200V , ID=4A, VGS=10V		15		nC
Turn-ON Delay Time	td(On)	See Specified Test Circuit		15		ns
Rise Time	tr	See Specified Test Circuit		15		ns
Turn-oFF Delay Time	td(Off)	See Specified Test Circuit		45		ns
Fall Time	tf	See Specified Test Circuit		25		ns
Diode Forward Voltage	VSD	IS =4A , VGS = 0			1.2	V

Switching Time Test Circuit

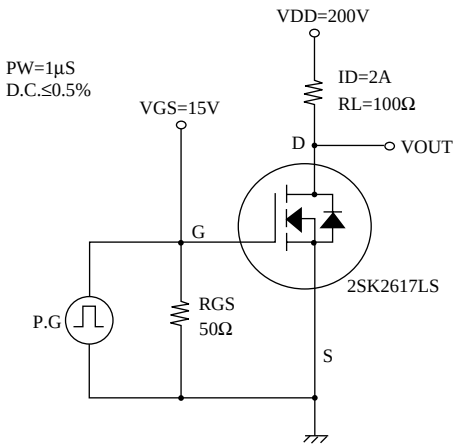

Case Outline

TO-220FI(LS)
(unit:mm)

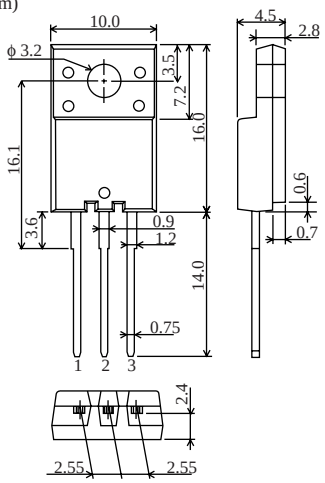

Specifications and information herein are subject to change without notice.

SANYO Electric Co., Ltd. Semiconductor Business Headquarters
TOKYO OFFICE Ttokyo Bldg., 1-10,1 Chome, Ueno, taito-ku, 110 JAPAN

960202TM2fXHD