VFTCI Series OCXO

VF Technologies

COOL…TO THE TOUCH

Product Data Sheet

Features

- SC-cut crystal
- High Stability (up to ± $5x10^{-9}$)
- Low Aging ($5x10^{-10}$/day, $5x10^{-8}$/year)
- Low Phase Noise (-160 dBc/Hz, TYP, floor)
- Sine Wave or HCMOS/TTL output
- 4.8 MHz to 180 MHz Frequencies Available

Applications

- Telecommunication Systems
- Data Communications
- GPS
- Instrumentation

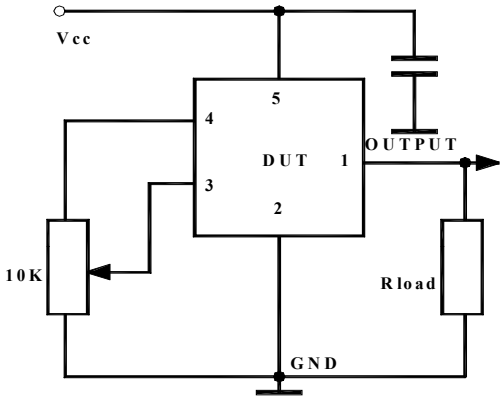

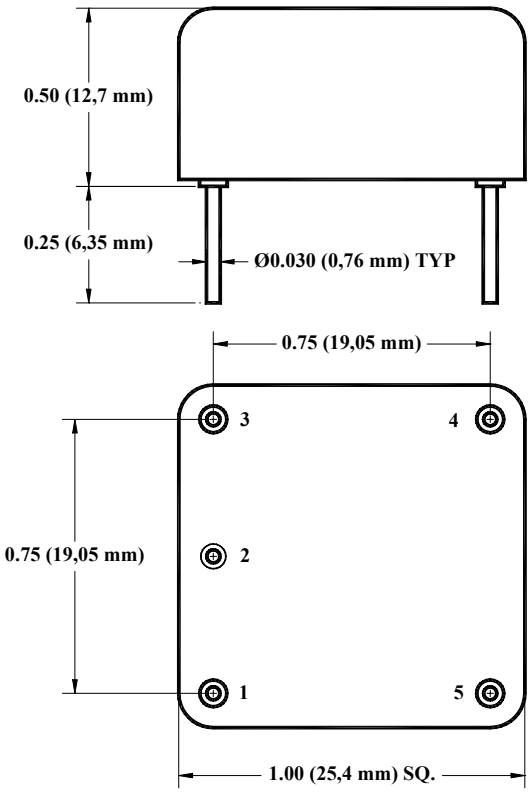

VFTCI Series OCXO

Specifications:

Parameter	Symb	Condition	Min	Typ	Max	Unit	Note
Absolute Maximum Ratings							
Input Break Down Voltage	Vcc		-0.5		13.0	V	
Storage temper.	Ts		-40		85	°C	
Control Voltage	Vc		-1		9	V	
Electrical							
Frequency	F		4.8	10.000	180	MHz	
Frequency stability	ΔF/F	vs. Temp.		±20		ppb	See chart below
		vs. Supply		1	5	ppb/V	
Aging		per day per year		5E-10 1E-7			after 30 days 5E-8 available
Allan Variance		.1s to 10s		1E-11			
SSB Phase Noise		10 Hz 100 Hz 10 KHz		-120 -150 -160		dBc/Hz	At Higher Freq. Deteriorates by 20Log N dB
Retrace		After 30 minutes			±20	ppb	
G-sensitivity		worst direction			±1.0	ppb/G	
Input Voltage	Vcc		4.75	5.0	5.25	V	3.3V, 12V±5% optional
Power consumption	P	steady state, 25°C steady state, -30°C start-up @ -30°C		0.8 1.5 2.5	1	W	
Load	10KOhm//15pF (HCMOS/TTL), 50 Ohm (Sinewave)						
Warm-up time	τ	to 0.1ppm accuracy		2	3	minutes	
Output Waveform		3.3V HCMOS/TTL compatible or Sinewave (>+7dBm)					-25dB Harmonics at sine
Control voltage	Vc		0		4.0	V	To 2.8V at Vcc=3.3V
Pull range		from nominal F	±0.5	±1		ppm	At 10 MHz
Deviation slope		Monotonic, posit		0.4		ppm/V	
Setability	Vc0	@25°C, Fnom.	1.0	2.0	3.0	V	

All parameters for 10 MHz

Environmental and Mechanical	
Operating temp. range	-30°C to 70°C Standard, Other options – see chart below
Mechanical Shock	Per MIL-STD-202, 30G, 11ms
Vibration	Per MIL-STD-202, 5G to 2000 Hz
Soldering Conditions	230°C for 30s Max SMD profile
Electrical Connections	
Pin Out	Pin #1- Output; Pin #2- GND; Pin #3- Vc; Pin #4 - Vref ; Pin#5 - Vcc

Creating a Part Number

Rev 04172003

VFTCI [ ] [ ] [ ] [ ] [ ] **FREQUENCY, MHz**

Output

Code	Specification
T	TTL
S	Sinewave

Temperature Range

Code	Specification
A	0°C to 50°C
B	-10°C to 60°C
C	0°C to 70°C
D	-20°C to 70°C
E	-30°C to 70°C
F	-40°C to 80°C

Temperature Stability

Code	Specification
17	$1x10^{-7}$
58	$5x10^{-8}$
28	$2x10^{-8}$
18	$1x10^{-8}$
59	$5x10^{-9}$
YZ	$Yx10^{-Z}$

Aging

Code	Specification
L	$1x10^{-9}$/Day
S	$5x10^{-10}$/Day
P	$2x10^{-10}$/Day

Supply Voltage

Code	Specification
5	5V ± 5%
2	12V ± 5%
3	3.3V ± 5%

Not all combinations are available. Consult Factory.